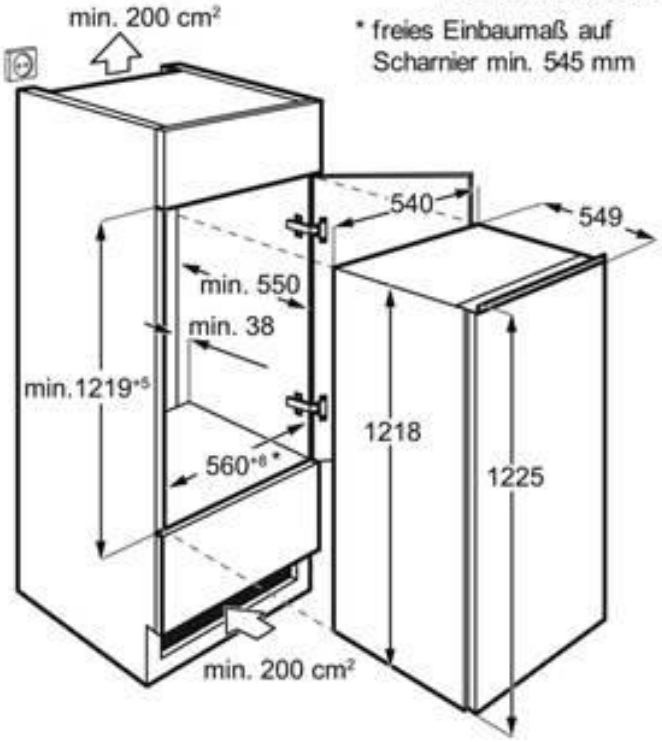PSGBRE140D002006